Xnergy

Autonomous Power Technologies

ORIGIN FOR (SG) WESTON ROBOT

White Paper

BEW59ED – Safe Deployment of Xnergy Wireless Charger

Version: 1.0

Date: July 2021

Copyright © 2021 XNERGYAPT™ . All rights reserved.

Abstract

Safety is always the prime concern for everyone. Moreover, wireless charging is one of the niche and new technologies in the world for any electrified mobility applications as it involves complex design in achieving high power and high frequency. Generally, one will wonder how safe is Xnergy wireless charger product itself? Is Xnergy wireless charger product safe to be use in the public?

Xnergy is proudly to present BE series wireless charger technology which has complied all safety aspects. This white paper will address the safety concerns and share the 3 safety topics:

(i) the product safety protections for any electrified mobility systems,
(ii) the highest standard safety compliance certified by internationally well-known certification company TUV SUD
(iii) and safety installation and deployment in the public.

Table of Contents

1. Introduction of Xnergy BE Series Wireless Charger 3
2. Xnergy Wireless Charger Product Safety Protection 4
2.1 Over Voltage Protection 4
2.2 Over Current Protection 4
2.3 Short Circuit Protection 4
2.4 Over Charging Cut Off Protection 5
2.5 Thermal Protection 5
2.6 Abnormal Operation Protection 5
3. Xnergy Product Safety Compliance and Certification 6
4. Safe Installation Recommended Guidelines 7
4.1 Appropriate Cable Sizing 7
4.2 Mechanical Mounting 7
4.3 Safety Clearance and Distancing 9
5. Summary 13
6. Revision History 13
7. Important Notice and Disclaimer 13

ORIGIN FOR (SG) WESTON ROBOT

Copyright © 2021 XNERGYAPT™. All rights reserved.

1. Introduction of Xnergy BE Series Wireless Charger

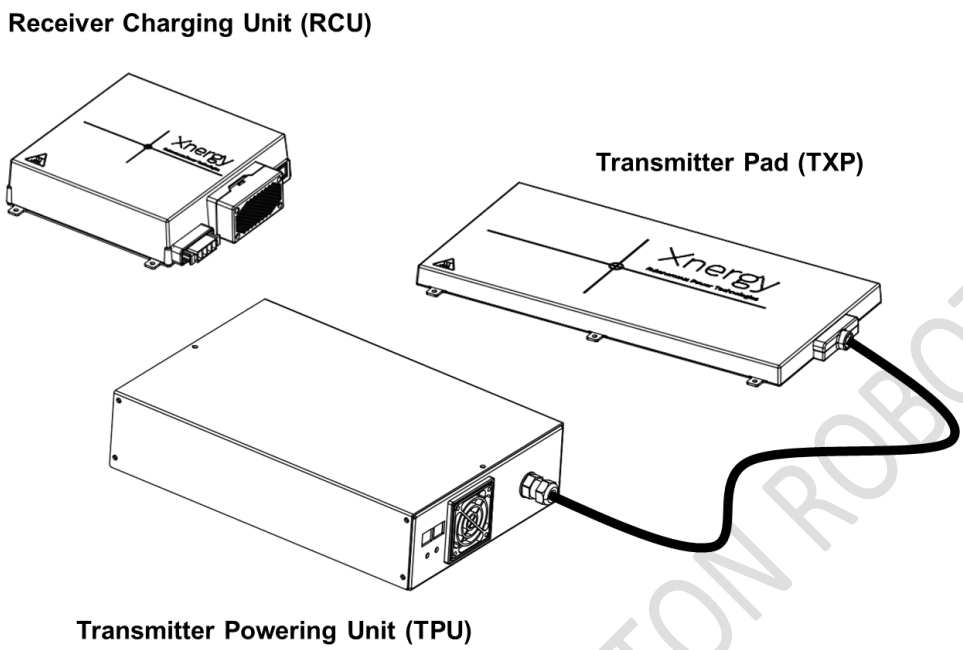

Xnergy BE series wireless charging is a new way of charging electrical driven applications through the medium of air unlike the conventional method of using physical contact. The wireless charging process is achieved using magnetic field that allows energy to be transferred wirelessly through magnetic induction. As such, electrical isolation capability can be achieved, thus allowing charging power to take place safely even in wet and dirty environments.

Xnergy BE series wireless charging system consists of mainly 3 parts which are (1) transmitter powering unit (TPU) with (2) transmitter pad (TXP) and (3) compact receiver charging unit (RCU). The electrical power energy from the grid is being transferred wirelessly from the TPU and TXP to the RCU. Thus, allowing the RCU to charge the desired energy storage such as battery.

With the modular design, integrating chargers into any existing environment can be adopted easily and facilitated the installation with minimal changes required. The sophisticated design of inductive coil also allows our high power, efficient and compact chargers to have larger and wider displacement tolerance requiring less accuracy parking or docking of any mobile robotics. These attractive attributes of Xnergy wireless chargers help evolving the current robotic systems into the next generation by becoming more autonomous and intelligent.

ORIGIN FOR (SG) WESTON ROBOT

Copyright © 2021 XNERGYAPT™ . All rights reserved.

2. Xnergy Wireless Charger Product Safety Protection

This section provides detailed explanations on the key safety protection functionalities and features of Xnergy BE series wireless charger product.

- 2.1 Over Voltage Protection
- 2.2 Over Current Protection
- 2.3 Short Circuit Protection
- 2.4 Over Charging Cut Off Protection
- 2.5 Thermal Protection
- 2.6 Abnormal Operation Protection

2.1 Over Voltage Protection

Over voltage is one of extreme stress conditions where the connection between any charger and the battery is broken, thus causing a surge in the voltage experienced by both devices with the sudden discontinuing flow of charging current.

Xnergy BE series wireless charger comes with over voltage protection to prevent itself from being damaged when the users accidentally unplug the battery from Xnergy Receiver Charging Unit (RCU) during the wireless charging operation or when the battery BMS suddenly cut off by opening its internal protection relay.

Xnergy BE series wireless charger has gone through a series of stress test under high voltage and high current conditions. With this over voltage protection, Xnergy wireless charger product has fast detection capability to identify the error and the Transmitter Powering Unit (TPU) will immediately cut off all wireless power transfer to prevent catastrophic damage. This protection will increase the reliability of any electrified mobility applications bringing less impact to the operation downtime.

2.2 Over Current Protection

Over current condition usually occurs when the load is drawing too much current from the charger especially when user connects more batteries either in series or parallel without prior informing Xnergy. Typically. this unintended action will cause heating of devices if there is no protection feature in the product.

Xnergy BE series wireless charger has over current protection functions as the output charging current is always controlled by the easy configurable RCU. Besides that, there is also fuse protection to prevent damage to the wireless charger product and thermal protection as explain in 2.5 Thermal Protection is included to monitor any abnormal heating of components for over current condition.

2.3 Short Circuit Protection

Short circuit condition happens when there is a short connection between the positive and the negative polarities of the battery connected to RCU accidentally during testing. The undesirable results of short circuit if not properly managed will damage the entire system and will even cause fire incidents.

Xnergy BE series wireless charger product has fast detection capability to detect the current spikes transient at the terminal output and all wireless charging power will be cut off immediately within a very short period of time to protect both the battery and the robot systems.

ORIGIN FOR (SG) WESTON ROBOT

Copyright © 2021 XNERGYAPT™ . All rights reserved.

2.4 Over Charging Cut Off Protection

In the event that the battery capacity is full and the RCU is still continuing to produce charging current despite less than 0.05 C, the battery voltage in the electric mobility vehicle may continue to increase beyond the fully charged voltage value.

Even though it is unlikely that there will be over charging conditions as Xnergy RCU is a smart device that is always easily configured and has the ability to control the output voltage and output charging current according to the battery maximum specification ratings, but Xnergy product has additional over charging cut off protection.

With wireless charging cut off protection feature in RCU, the cut off voltage value is set between its full charge voltage value and its maximum rated voltage given in the battery datasheet before delivery. The RCU will cut off all electrical power when the battery reaches the cut off voltage value. This protection feature is designed to protect the battery from being over-charged to avoid heating and fire hazards.

2.5 Thermal Protection

The TPU and the RCU models are all equipped with thermal protection feature. This is designed to ensure that the wireless charger will not overheat to cause fire, electric shock, and undesired accidents.

There is a total of three temperature threshold levels. The first two levels will trigger current derating setting. The last temperature threshold level will stop the wireless charging operations immediately.

The current derating is included in the thermal protection feature to prolong the wireless charging operation instead of having the wireless charging operation to be ceased immediately. When current derating is triggered, the wireless charging operation will continue at lower output power. If the temperature continues to be lower than the second threshold, the output current will remain at this reduced level.

Otherwise, if the temperatures continue to increase and reach the second temperature threshold level, there will be another current derating event. As long as the temperatures continues to be lower than the third temperature threshold level, the output current will remain at this reduced level.

However, if the measured temperatures continue to heat up and reach the third temperature threshold level, the wireless charging operation will immediately stop. This is to protect the system and avoid fire and electric shock hazards.

2.6 Abnormal Operation Protection

There are occasions that the electric mobility vehicles accidentally move away from the transmitter station during wireless charging operation. In this instance, the wireless charger will stop the wireless charging operation immediately. This is to protect both the wireless charger and the electric mobility vehicle system as well as additional safety to users.

ORIGIN FOR (SG) WESTON ROBOT

Copyright © 2021 XNERGYAPT™ . All rights reserved.

3. Xnergy Product Safety Compliance and Certification

Xnergy BE series wireless charging product is certified by the internationally well-known third party certification company, TÜV SÜD, and carries the CE marking accordingly:

RED Directive (2014/53/EU)
RoHS Directive (2011/65/EU)

Xnergy wireless charger product has successfully complied with the essential requirements of international certification bodies based on the following three directives (Safety, Electromagnetic Compatibility and Radio Equipment):

Safety Directives	
Safety	IEC 62368-1
Stray field (human exposure)	EN 62311 ICNIRP
Electromagnetic Compatibility Directives	
EMC emissions	EN 55011
EMC radio equipment device	EN 301 489-1/-17
EMC immunity	EN 61000-4-2/3/4/5/6/11
Harmonic currents emission	EN 61000-3-2
Voltage fluctuations and flickers emission	EN 61000-3-3
Radio Equipment Directives	
Wireless power transmission system	EN 303 417
Wideband transmission system	EN 300 328
Telecommunication regulations	IMDA (Singapore)
RoHS	
RoHS	EN 50581:2012

For Safety Directives, Xnergy BE series wireless charger product complied IEC 62368-1 and EN 62311 which covers various safety concerns during the tests in aspects of electrically caused injury, electrically caused fire, mechanically caused injury, thermal burn injury and even radiation. Please refer to **BEW1683- Human Exposure to Electromagnetic Fields from Wireless Power Transfer System** for more details on electromagnetic field exposure to humans.

In addition to that, Xnergy BE series wireless charger has complied EMC to achieve compatibility operations of wireless charger with other electronic devices as well as complying high power high frequency operated Xnergy wireless charging system within the permissible radio frequency regulations.

The full text of the EU declaration of conformity is available at the following internet address: www.xnergytech.com. Alternatively, please contact Xnergy sales office.

ORIGIN FOR (SG) WAYSON ROBOT

Copyright © 2021 XNERGYAPT™ . All rights reserved.

4. Safe Installation Recommended Guidelines

It is highly recommended to follow the guidelines for safe installation and using of Xnergy BE series wireless charger product in addition to the product protection features and the safety certification compliances. Details of the installation guidelines can be referred to **BET7E51 User Manual**.

This section provides recommended guidelines for:

- 4.1 Appropriate Cable Sizing - Safe electrical installation
- 4.2 Mechanical Mounting - Safe mechanical mounting
- 4.3 Safety Clearance and Distancing – Safe operating environment

4.1 Appropriate Cable Sizing

Please ensure that cable sizing must be appropriate during the setting up of Xnergy wireless charger and it is highly recommended to have at least 4A/mm^2 during cable selection depending on having the desired charging power. Cable sizing applies to both power inlet and outlet cables for IEC C19 and Molex 1725090224 receptacle respectively.

Please refer to the following table and illustrations for appropriate AC power connections setup depending on the number of wireless transmitter powering units be it single or parallel stacked for higher wireless power transfer.

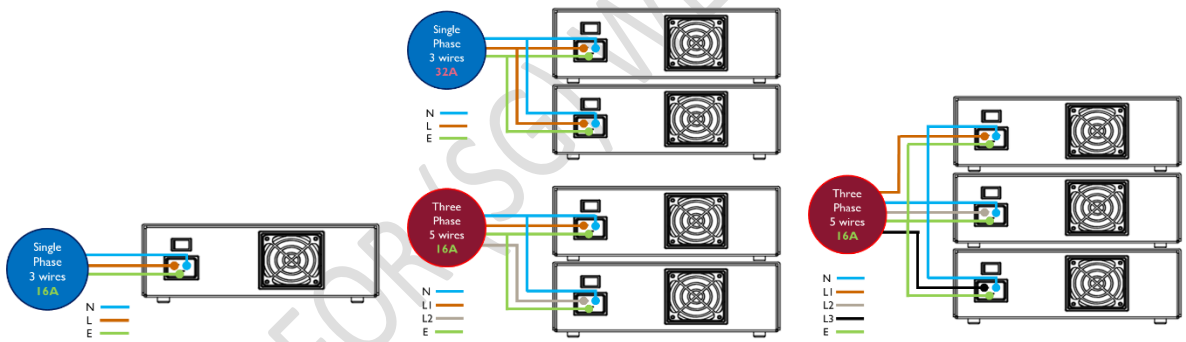

(a) Single TPU (b) Parallel 2 TPUs (c) Parallel 3 TPUs

Direct Single Phase 3 wires 13 A (< 2000W charging power)	Single Phase 3 wires 32A	Three Phase 5 wires 16A
Direct Single Phase 3 wires 16 A (> 2000W charging power)	Three Phase 5 wires 16A	

4.2 Mechanical Mounting

It is important to make sure that the mechanical mounting is strictly followed to the given orientation as illustrated in the following diagrams which is due to fire safety concerns. Ensure amber air flow clearance as well to allow heat dissipation of the forced air-cooling product design. The illustrations are also applicable for parallel setup of Xnergy wireless chargers. Please contact Xnergy for more enquires and support for setting up.

ORIGIN FOR SOMVESTON ROBOT

Copyright © 2021 XNERGYAPT™ . All rights reserved.

TPU Orientation with Air Flow Clearance and Fire Safety Considerations

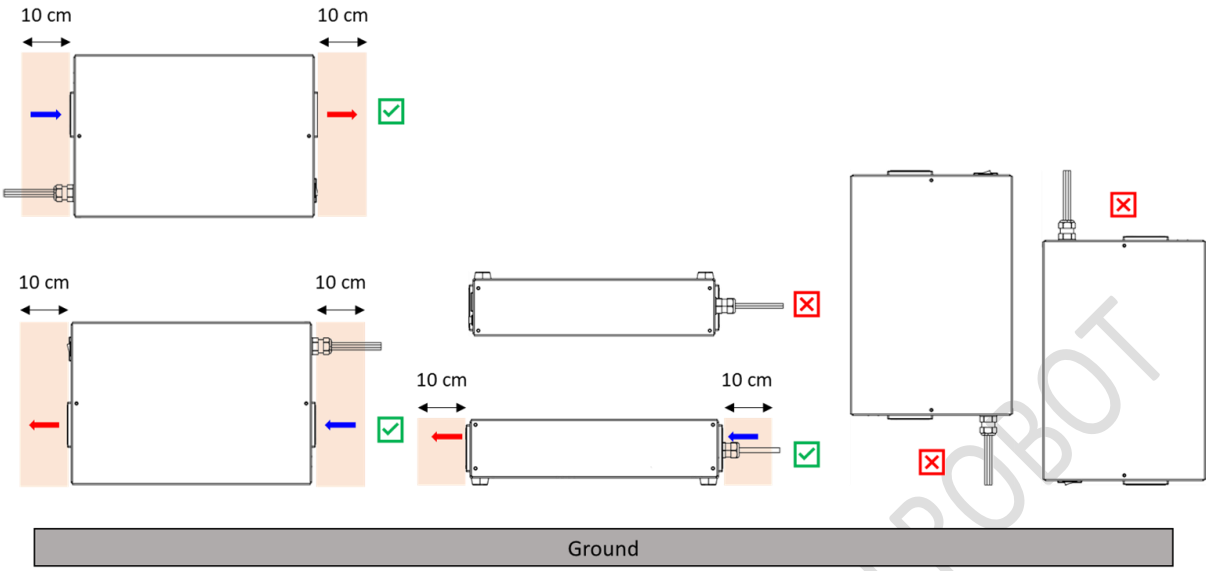

ORIGIN FOR (SG) WESTON ROBOT

Copyright © 2021 XNERGYAPT™ . All rights reserved.

TXP Orientation

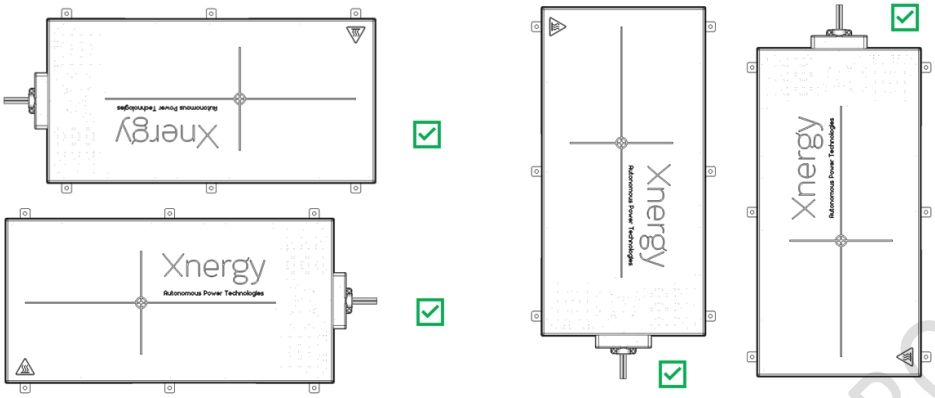

Ground

RCU Orientation with Air Flow Clearance and Fire Safety Considerations

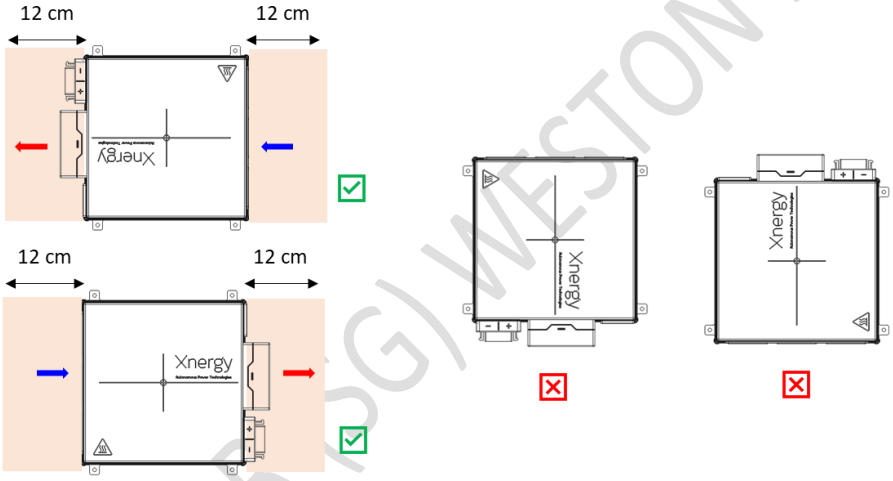

Ground

4.3 Safety Clearance and Distancing

It is important for operators and technicians to understand the effective charging tolerance capability of wireless charger before installation of TPU, TXP, and RCU can be carried out. This allows the wireless charger to operate as intended.

The effective charging tolerance capability shall be presented and clearly illustrated as follows with the indications of x-axis, y-axis and z-axis (x, y, z) based on the reference of the TXP and RCU facings.

ORIGIN FOR (SG) WESTON ROBOT

Copyright © 2021 XNERGYAPT™ . All rights reserved.

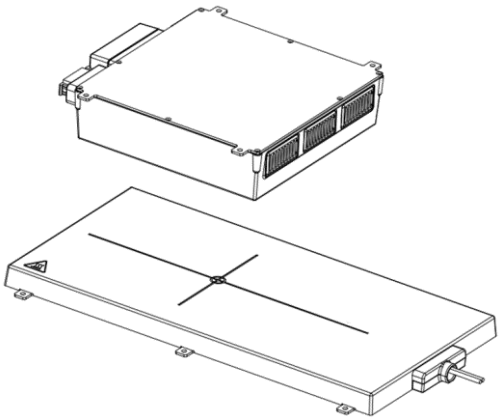

Isometric View

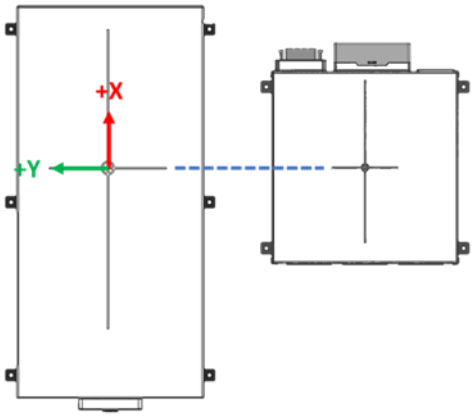

Top View

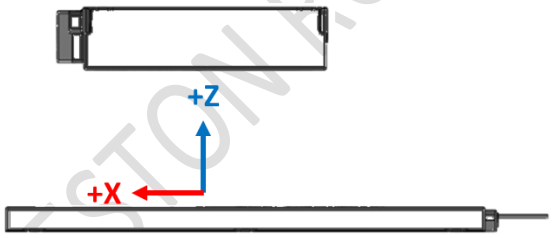

Side View

The directional of x-axis and y-axis shall be indicated on the top view of TXP while the z-axis can be understood from the side view of TXP. The z-axis is referred to the air gap distance. The exact location of (0, 0, 0) for x-axis (red arrow), y-axis (green arrow) and z-axis (blue arrow) is referenced to the centre point of the TXP based on the top view and side view.

Important Note:
The TXP and the RCU must always be facing each other and be on the same side for the installation.

The effective charging tolerance capability for guaranteed wireless charging operations shall be provided and displayed as below:

24V system

ORIGIN FOR (SG) WESTON ROBOT

Copyright © 2021 XNERGYAPT™ . All rights reserved.

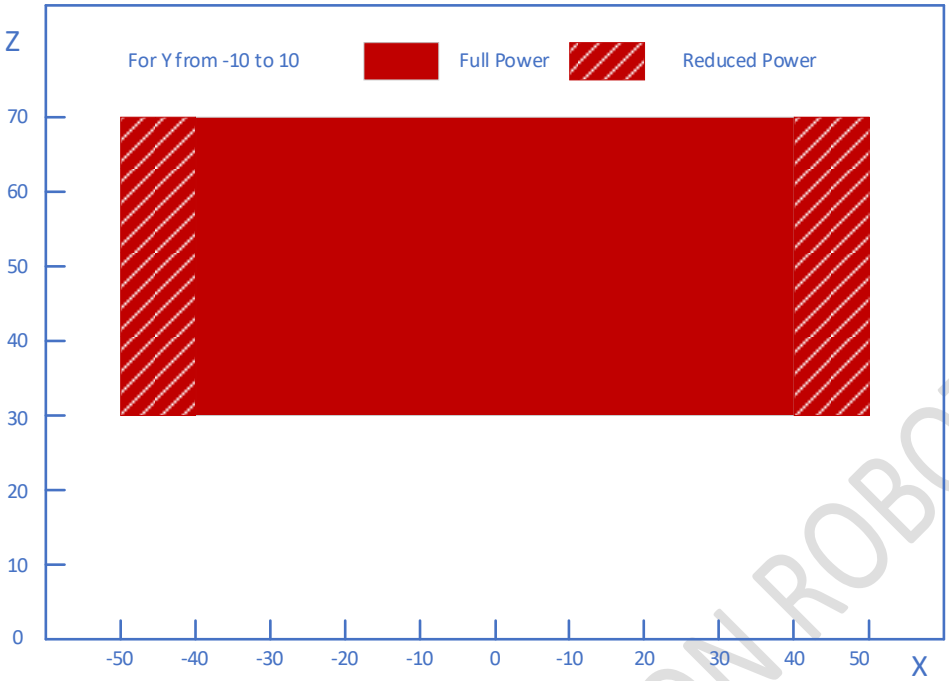

Effective Charging Tolerance of Wireless Receiver Charging Units 24V model

48V system

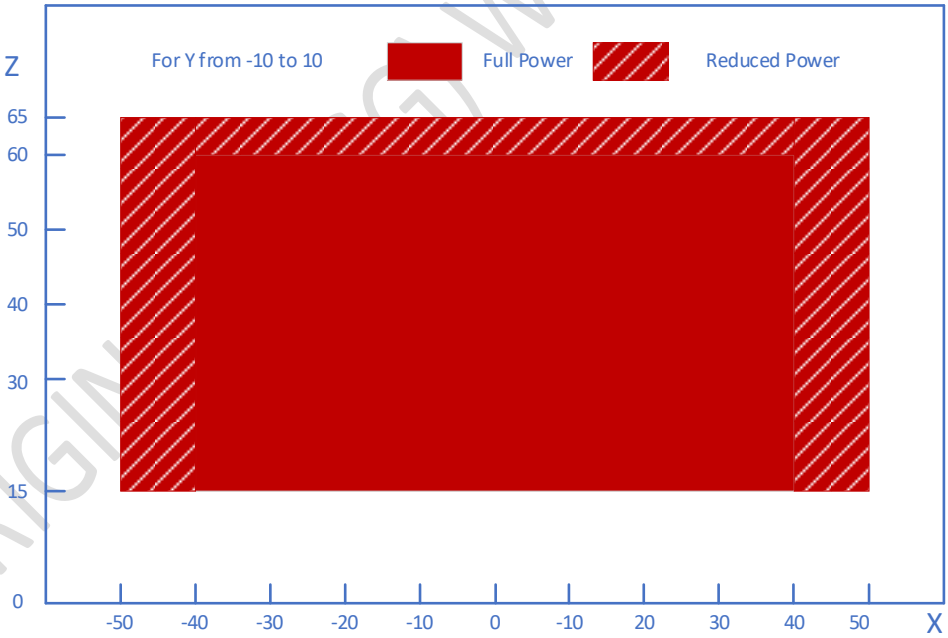

Effective Charging Tolerance of Wireless Receiver Charging Units 48V model

As beyond these permissible tolerance capability, the wireless charging operations is not guarantee, instructions shall be provided for the operator to work within this tolerance capability.

ORIGINAL WESTON ROBOT

Copyright © 2021 XNERGYAPT™ . All rights reserved.

In addition, clear instruction and notice shall be provided to ensure that there is no metallic or unintended magnetic items to be found near within indicated distance away from the surrounding of TXP and RCU as these metallic or magnetic items may cause fire and electric shock.

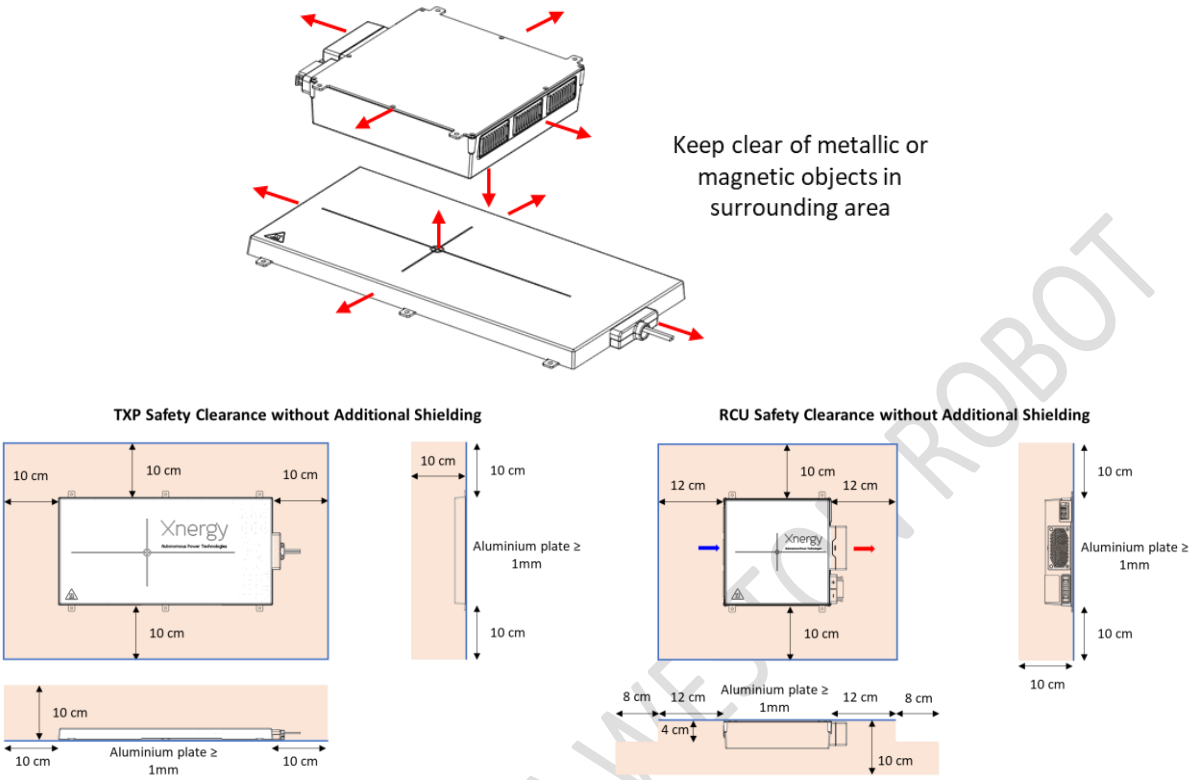

Clearance of Metallic and Magnetic Objects from Wireless Charging System

A standard operating procedure (SOP) or good practice must be applied at all times for the safety of the personnel who may be in close proximity of the wireless charging system to ensure safe separation distance. Warning instructions or indications are necessarily required for work safe environment and is achieved by having yellow black strip markings on the floors or putting notice board to forewarn the follows:

a) No physical contact is allowed on the TXP and RCU at all time to avoid undesirable harm (e.g. burnt) from happening. The surface of both TXP and RCU may be hot during or even after the wireless charging operation.
b) For safety precaution, normal healthy people without body-worn or medical implant devices need to keep safe separation distance of 30 cm away during wireless power transfer operation.
c) For medically unfit people (such as pacemakers) especially with body-worn or medical implant devices be it passive or active, they need to keep away a safe separation distance of 2 m. While the EMF is radiated only during wireless power transfer operation, it is good practice for risky people to stay away at all times.

ORIGIN FOR (SG) WEEDER ROBOT

Copyright © 2021 XNERGYAPT™ . All rights reserved.

5. Summary

This white paper provides an insight information of Xnergy wireless charger protection features, certified product safety compliance and also recommended strict guidelines of safe deployment to provide and assurance of safe environment for public.

6. Revision History

Version Number	Date issued	Author	Update information
V1.0	2021.07.29	Xavier Lim (Dr)	First published version

7. Important Notice and Disclaimer

XNERGY PROVIDES TECHNICAL DATA (INCLUDING DATASHEETS), DESIGN RESOURCES (INCLUDING REFERENCE DESIGNS), APPLICATION OR OTHER DESIGN ADVICE, SAFETY INFORMATION, AND OTHER RESOURCES "AS IS" AND WITH ALL FAULTS, AND DISCLAIMS ALL WARRANTIES, EXPRESS AND IMPLIED, INCLUDING WITHOUT LIMITATION ANY IMPLIED WARRANTIES OF MERCHANTABILITY, FITNESS FOR A PARTICULAR PURPOSE OR NON-INFRINGEMENT OF THIRD PARTY INTELLECTUAL PROPERTY RIGHTS.

These resources are intended for skilled engineers working with XNERGY products. You are solely responsible for (1) selecting the appropriate XNERGY products for your application, (2) designing, validating and testing your application, and (3) ensuring your application meets applicable standards, and any other safety, security, or other requirements. These resources are subject to change without notice. XNERGY grants you permission to use these resources only for development of an application that uses the XNERGY products described in the resource. Other reproduction and display of these resources is prohibited. No license is granted to any other XNERGY intellectual property right or to any third-party intellectual property right. XNERGY disclaims responsibility for, and you will fully indemnify XNERGY and its representatives against, any claims, damages, costs, losses, and liabilities arising out of your use of these resources. XNERGY's products are provided subject to XNERGY's Terms of Sale or other applicable terms provided in conjunction with such XNERGY products. XNERGY's provision of these resources does not expand or otherwise alter XNERGY's applicable warranties or warranty disclaimers for XNERGY products.

Mailing Address: Xnergy Autonomous Power Technologies Pte Ltd., 2 Clean Tech Loop, #04-09, Singapore 637144

Copyright © 2021 XNERGYAPT™ . All rights reserved.

ORIGIN FOR (SOMESTOM ROBOT

Copyright © 2021 XNERGYAPT™ . All rights reserved.